Tachometer relay RR10

3 metering ranges, from 10 rpm. to 20.000 rpm.

Adjustable start-up delay, from 0 to 10 seconds.

Universal pulse inputs for contact, NPN/PNP sensor, Namur sensor, etc.

Selectable latch function.

1-pole relay output.

DC supply or AC supplies up to 230 VAC

Made in accordance with the CE and EMC regulations

The C-mac® tachometer relay type RR10 can be used for many different kinds of speed monitoring. The relay is available in 3 different metering ranges, calibrated in rpm (revolutions per minute).

The relay is supplied with universal pulse inputs, which enables you to use many different types of sensors. In addition, the relay can also deliver the supply voltage to the sensor.

You can select, if you want the output relay to release at too high or too low speed.
You can also select a latch function, which means the relay will stay deactivated, if the set limit has once been exceeded. The latch is cancelled by disconnection of the latch input or the supply voltage.

When the function, where the relay is released at too low speed, is selected, the adjustable time-delay can be used to ensure that the unit, which is monitored, can reach its correct speed, before the module starts monitoring.

Common technical data:

Supply voltage, AC: 24, 115 and 230 VAC +/- 10%

Supply frequency: 40-70 Hz

Variable supply: 12-50 VDC or 48-250 VDC

Isolation voltage: Supply - internal - output: 3.75 kV

Supply, DC: 24 VDC +/- 10%
Note: With this DC supply there is no galvanic isolation between the supply and internal electronics.

Power consumption: 2,5 VA

Operating temp.: -20°C to +60°C

Humidity: 0 - 90% RH, non-condensing

Sensor voltage:
NAMUR sensor: 8,2 VDC, max. 10 mA
NPN / PNP sensor: 24 VDC, max. 10 mA
Contact input: 10 VDC, 2 mA

Reaction delay: The reaction delay depends on the set value, as the module measures the time between two pulses.
Example: At 100 rpm: reaction delay 0,6 sek.
At 10000 rpm: reaction delay 6 msek.

Minimum pulse time: minimum pulse- and pause time is 0,3 msek.

Indications:
Green LED: Supply voltage connected
Red LED: Relay aktiv

Adjustments:
Start-up delay: Potentiometer, scale 0-10 sec.
Setpoint: Potentiometer, scale 1-20 rpm.

Note: The start-up delay is only active when the unit is used for underspeed detection.
(pin 7-11 connected)

Hysteresis.: 3 % of the set level

Temp.coefficient: typ. 0,1% per °C

Max. load, relay: 8 A - 250 VAC, ohmic load

Selection of function: Pin 11.
If the terminal is open, the relay releases, when the speed exceeds the set limit.
If terminal 11 and 7 are connected the relay releases, when the speed is lower than the set limit.

Latch function: Pin 9.
If terminal 9 and 7 are connected, and the relay releases, it will stay released, until 9-7 are disconnected or the supply voltage is interrupted.

EMC og safety regulations.

Emmision: EN 50 081 - 1
Immunity: EN 50 082 - 2
Safety: EN 60 730

Approvals: The units are produced in accordance with the CE og low voltage regulations.

Metering ranges: 10 - 200 rpm.
100 - 2000 rpm.
1000 - 20000 rpm

Comadan
WE ARE IN CONTROL
Tel.: +45 86 44 78 77 · Mail: sales@comadan.com · www.comadan.com

Functional diagram:

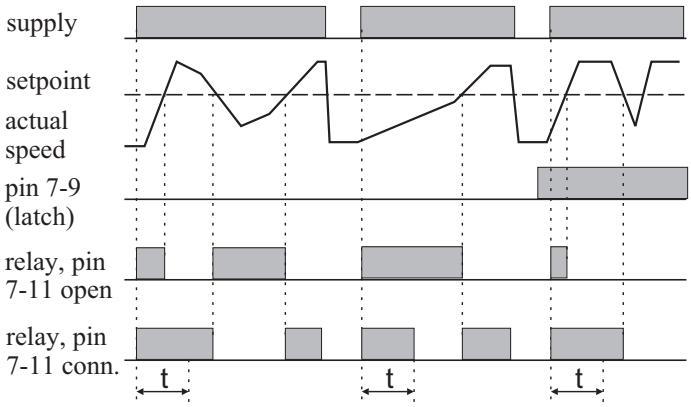

t = adjusted start-up delay

Connections RR10:

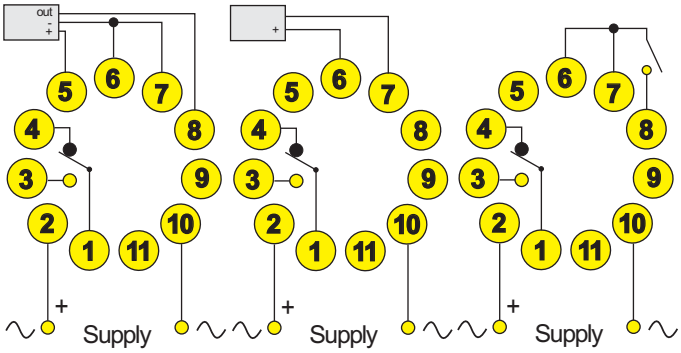

Ex 1: NPN/PNP sensor | Ex 2: Namur sensor | Ex 3: Contact

Note:
You can only use NPN/PNP sensors with true open collector outputs.
If the sensor has an internal resistance to plus or minus, the module must be ordered for the actual sensor (NPN or PNP).
Alternatively you can insert a diode (e.g. 1N4007) in series with the sensor output, as shown in the examples below.

Connection PNP sensor:

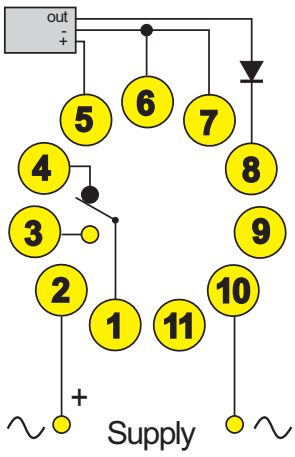

Connection NPN sensor:

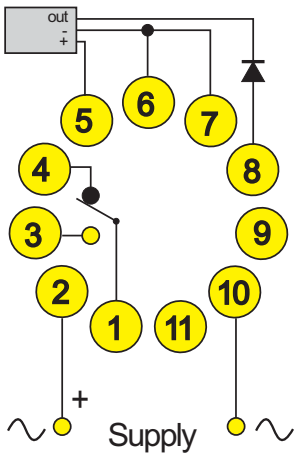

Ordering guide:

RR10-1-x-yyy-zzz

x-yyy = supply voltage:

0-024:	24 VDC
4-012:	12-50 VDC
4-048:	48-250 VDC
1-024:	24 VAC
1-115:	115 VAC
1-230:	230 VAC

zzz = range
200 = 10 - 200 rpm
2k = 100 - 2000 rpm
20k = 1000 - 20000 rpm

Ordering example: RR10-1-1-024-2k

If you want the module specifically for NPN or PNP sensor, it is added to the number, e.g.: RR10-1-1-024-2k-NPN

Mechanical dimensions:

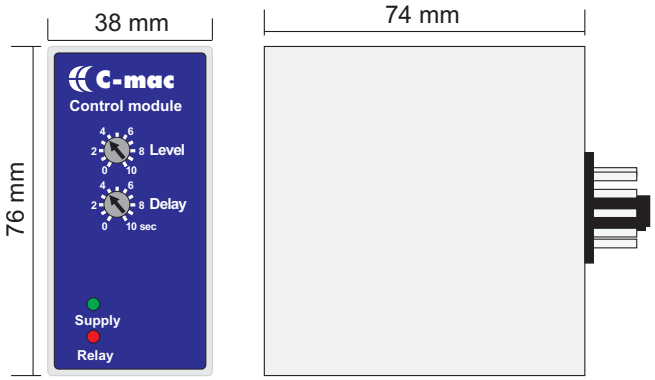

Materials and weight:

Housing:	NORYL-SE-1, grey, self-extinguishing
Housing bottom:	NORYL SE-1, GFN-2, black, self-extinguishing
Terminals:	Nickel-plated brass
Weight:	210 g

Comadan
WE ARE IN CONTROL
Tel.: +45 86 44 78 77 · Mail: sales@comadan.com · www.comadan.com